Motor length may vary
provide reserve space for expansion

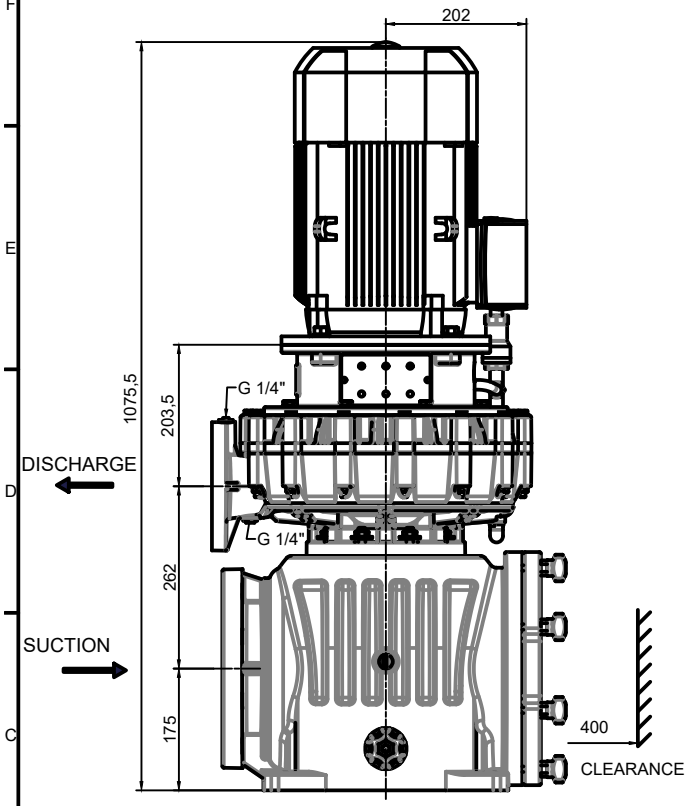

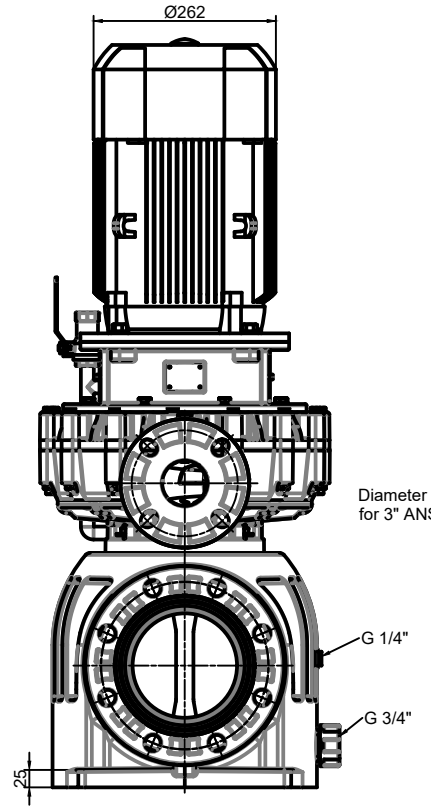

FLANGE CONNECTIONS COMPATIBLE
WITH ANSI CLASS 150 FLANGES

DISCHARGE

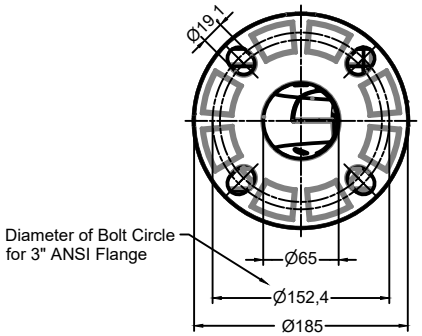

SUCTION

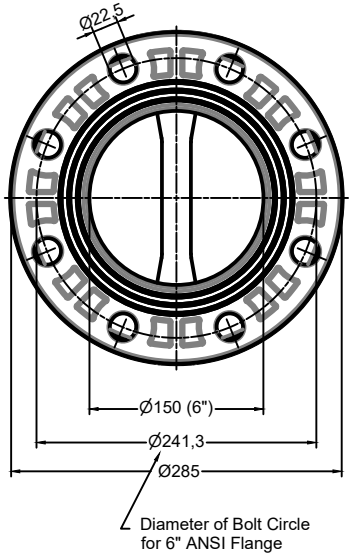

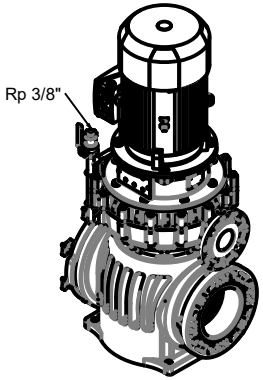

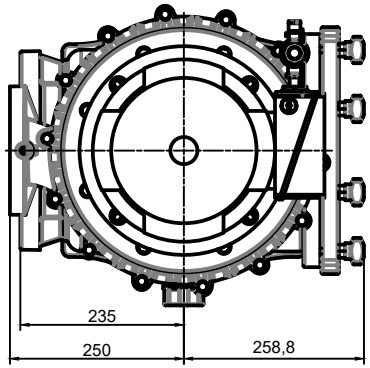

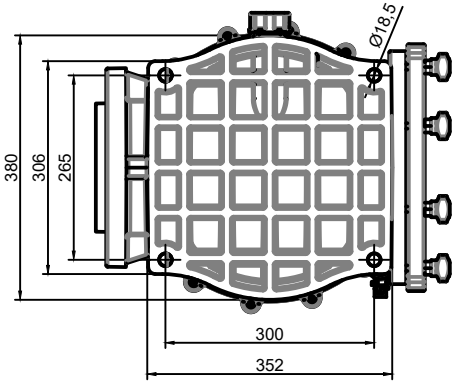

Motor

Frame Size: 132 M
Rating: 7.5 kW
10HP SF1.15

THE INFORMATION CONTAINED HEREIN IS THE PROPERTY OF SPECK PUMPS - POOL PRODUCTS, INC. NO PORTION OF THIS DATA SHALL BE RELEASED, DISC LOADED, USED, OR DUPLICATED FOR USE IN PROCUREMENT OR MANUFACTURING WITHOUT SPECIFIC WRITTEN CONSENT FROM SPECK PUMPS - POOL PRODUCTS, INC.

= Reference dimension

Tolerances to: DIN ISO 2768-m-K
Surface

Rev.	Description	Date	Name
1	Revised for SPECK USA	10.14.2016	

	Date	Name
Drawn	05.10.2016	tkraus
Checked		
Approved		

SPECK X pumps
8125 Bayberry Road
Jacksonville, FL 32259

File Name: VD61.11.011.idw

Scale: | Volume:- | Weight-
Material:
Part Number:

DIMENSIONAL DRAWING
BADU Block Multi 65/250 (132M frame motor)
with ASME 6" Suction Flange Connection ASME 3"
Discharge Flange Connection

Drawing Number: VD61.11.011.USA
Sheet 1 / 1
A2