Model 94

Commercial Pool Pump

SPECK pumps

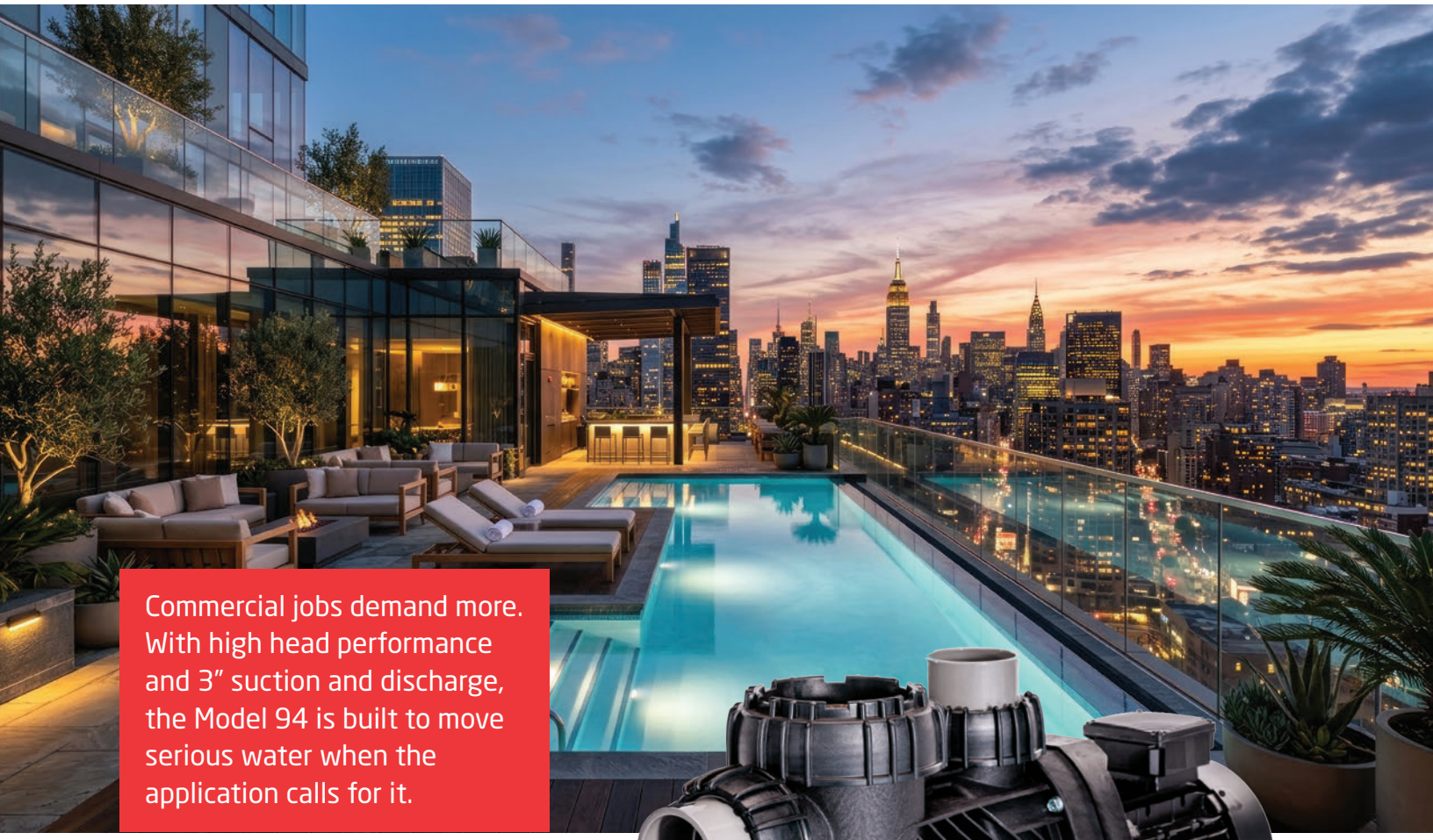

Commercial jobs demand more. With high head performance and 3" suction and discharge, the Model 94 is built to move serious water when the application calls for it.

- 3" Unionized Fittings for Maximum Flow
- 3.45 & 5 HP
- 2 year warranty



Model 94-IX

Proudly Assembled in the USA

WE BRING WATER TO LIFE!®

8125 Bayberry Road
Jacksonville, FL 32256 USA
info@speckpumps.com

Toll Free 800.223.8538
Telephone 904.739.2626
speckpumps.com

MODEL 94

High Performance
Plastic Commercial Pool Pump

SPECK

Speck Pumps' Model 94 expands our line to 3" suction and discharge. With up to 220 GPM @ 60 TDH, it offers powerful new options for high-head applications.



Model 94-IX (w/ TEFC Motor)

Features

- This high head pump comes complete with a Cyclam 20mm seal that allows the pump, if mistreated, to run dry for up to one hour.
- The pump can be used for pool water with a salt concentration of up to 5000 ppm.
- Six-bolt housing design for simple service.
- Every pump comes with union set, 2.5 internal /3" external with the 94-VI , and straight 3" internal on the 94-IX.
- Available with heavy-duty, energy-efficient, totally enclosed fan-cooled (TEFC) motors.
- Some models require either a motor starter or a VFD.
- Compatible with many manufacturers' VFDs.
- Every pump is performance wet-tested before leaving the Speck factory.

Trademarks and Certification

NSF

Dimensional Drawing

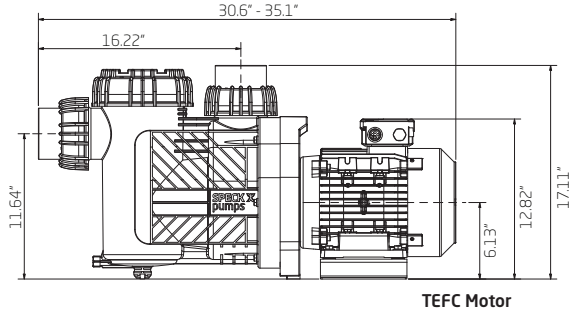

Performance Curves

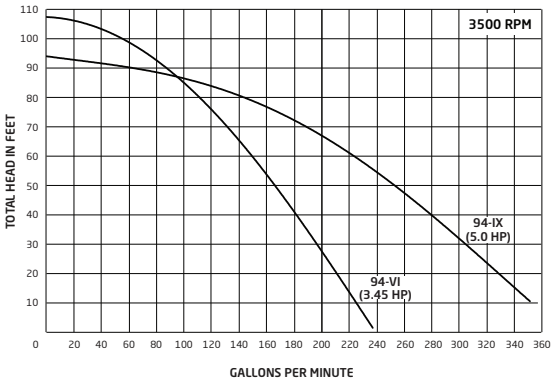

Technical Data

Single Speed

Order #	Model #	HP	S.F.	THP	Volts	Amps	Weight* lbs
IG224-1500F-000	94-IX	5.0	1.15	5.75	208-230	20.0-19.0	90

Variable Speed

Order #	Model #	HP	S.F.	THP	Volts	Amps	Weight* lbs
IG225-V345T-000	94-VI	3.45	1.0	3.45	230	14.0	62

Three Phase Single Speed (Full Rated)

Order #	Model #	HP	S.F.	THP	Volts	Amps	Weight* lbs
IG223-1300F-000	94-VI	3.45	1.0	3.45	208-230/460	9.1-8.2/4.2	80
IG223-1500F-000	94-IX	5.0	1.15	5.75	208-230/460	12.8-11.6/5.8	88

NOTE: *All Model 94 pumps, except variable-speed (VS) models, require either a motor starter or VFD.*
**Estimated ship weights*

8125 Bayberry Road, Jacksonville, Florida 32256 USA | Phone: (904) 739-2626 | Website: speckpumps.com

Rev. 09/2026